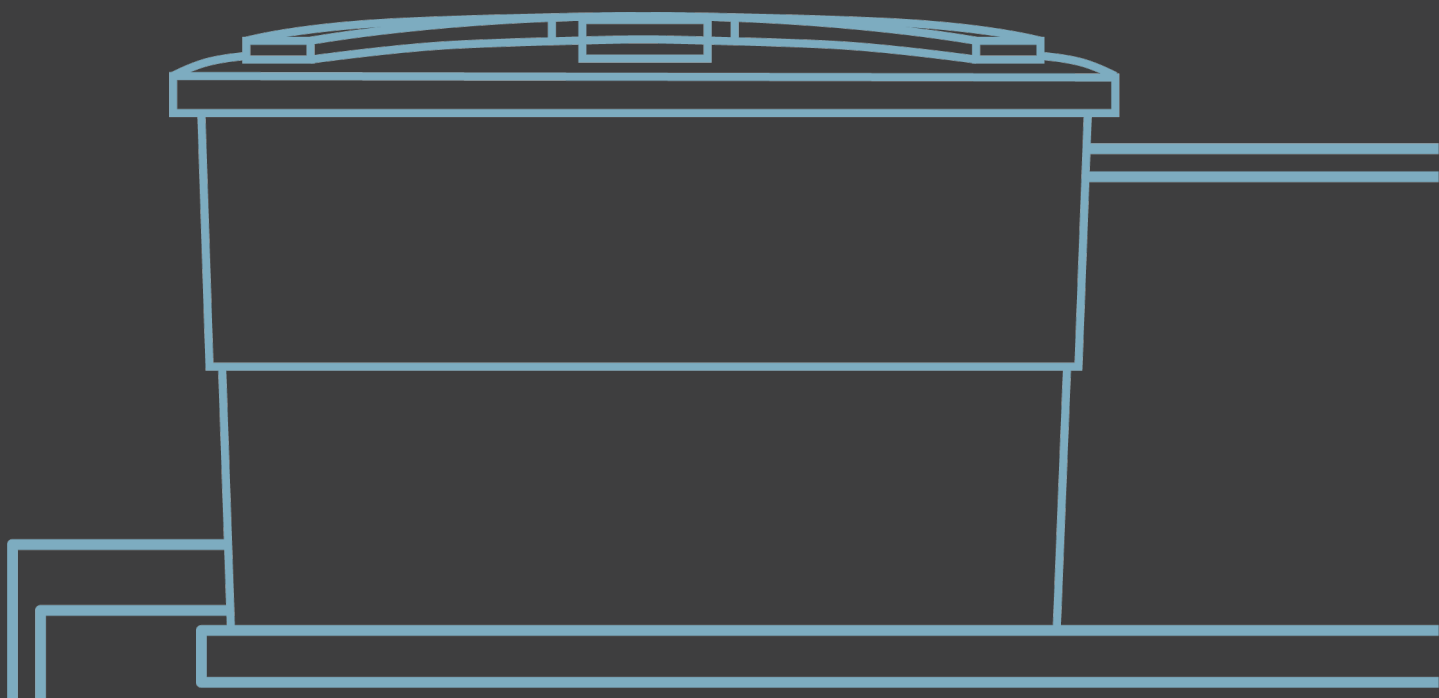

P.E. TANK™

LMD POLYETHYLENE WATER TANK

Joncan
Commercial Furniture Specialist

Polyethylene

Approvals

- SIRIM Standard: MS 1225 Part 1 - TANKS FOR COLD WATER STORAGE CAPACITY UP TO 600 GAL
- SIRIM Standard: MS 1225 Part 2 - TANKS FOR COLD WATER STORAGE CAPACITY MORE THAN 600 GAL

Tensile strength:
16 MPa
(ISO/R527-1966:Type 2 Speed D)

Density:
938 kg/m^3
(ISO1872/1-1986)

Elongation:
>200%
(ISO/R527-1966:Type 2 Speed D)

Flexural Modulus:
650 MPa
(ISO 178-1975)

Impact Strengh:
20 KJ/m^2
(ISO 179-1982 : Condition 2C)

Hardness (Shore):
62
(ISO 868-1985)

Softening Point:
117 °C
(ISO 306)

Thermal Conductivity:
0.48 W/m °C
(ASTM C117)

Meltong Point:
125 °C
(ASTM D2117)

Linear Expansion:
10x10^-4/ °C
(ASTM D696)

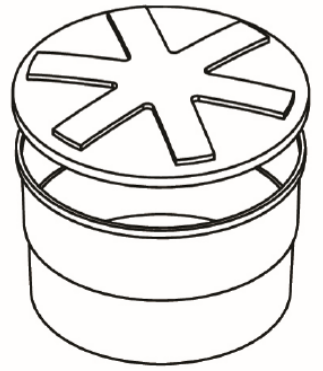

BUMI (OPEN TOP)

D_1 : Dimension of tank cover
D_2 : Dimension of tank base

H_1 : Height to top of tank
H_2 : Height to top of cover

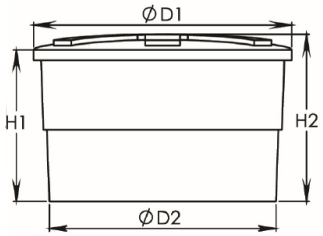

- All dimension are rounded-off to the nearest 10mm (or 0.5 inch).
- Dimension given above are for space required for installation purpose only.
- The manufacturer reserves the right to amend or change the design, price, patterns and specifications without any prior notice as continuous improvement achieved.

P.E. TANK™ Properties - Circular Series Category: **BUMI**

	Model	Capacity(Gallons)		External Dimensions - mm (inches)				List Price (RM)
		Effective (Gallons)	Nominal (Gallons)	Top(D_1) mm(inches)	Base(D_2) mm(inches)	H_1 mm(inches)	H_2 mm(inches)	
★★	BM 25/50	25	50	940(37)	813(32)	356(14)	457(18)	110
★★	BM 75	-	75	813(32)	585(23)	965(38)	1067(42)	140
JC	BM 50/80	50	80	1085(43)	880(35)	445(15)	535(21)	145
JC	BM 70/100	70	100	1145(45)	1025(40)	478(19)	520(20)	175
JC	BM 100/150	100	150	1235(49)	990(39)	680(27)	780(31)	245
JC	BM 150/200	150	200	1470(58)	1280(50)	600(24)	715(28)	330
JC	BM 200/250	200	250	1480(58)	1210(48)	820(32)	915(36)	410
JC	BM 250/300	250	300	1600(63)	1270(50)	985(39)	1085(43)	490
★★	BM 300/350	300	350	1473(58)	1194(47)	1346(56)	1549(61)	570
JC	BM 300/400	300	400	1550(61)	1230(48)	1030(41)	1100(43)	650
JC	BM 400/500	400	500	1600(63)	1230(48)	1315(52)	1455(57)	820
JC	BM 500/600	500	600	1720(68)	1270(50)	1330(52)	1400(55)	950

JC - Japan China

Joncan
Commercial Furniture Specialist

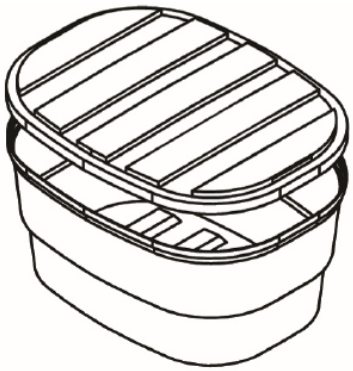

SEGI (OPEN TOP)

D_1 : Dimension of tank cover
D_2 : Dimension of tank base

H_1 : Height to top of tank
H_2 : Height to top of cover

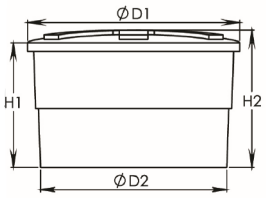

- All dimension are rounded-off to the nearest 10mm (or 0.5 inch).
- Dimension given above are for space required for installation purpose only.
- The manufacturer reserves the right to amend or change the design, price, patterns and specifications without any prior notice as continuous improvement achieved.

P.E. TANK™ Properties - Square Series Category: **SEGI**

	Model	Capacity(Gallons)		External Dimensions - mm (inches)				List Price (RM)
		Effective (Gallons)	Nominal (Gallons)	Top(D_1) (inches)	Base(D_2) (inches)	H_1 (inches)	H_2 (inches)	
★★	SG 30	-	30	736 X 508(29X 20)	533 X 355(21 X 14)	381(15)	406(16)	105
★★	SG 50	25	50	990 X 965(39 X 38)	757 X 762(31X30)	330(13)	355(14)	130
★★	SG 50/80	50	80	1245 X 1219(49 X 48)	1041 X1016(41 X 40)	356(14)	457(18)	175
JC	SG 70/100	70	100	1086 X 1086(43 X 43)	915 X 915(36 X 36)	570(22)	680(27)	195
JC	SG 100/150	100	150	1327 X 1327(52 X 52)	1070 X 1070(42 X 42)	620(24)	765(30)	290
JC	SG 150/200	150	200	1478 X 1478(58 X 58)	1210 X 1210(48 X 48)	630(25)	775(31)	385
JC	SG 200/250	200	250	1612 X 1612(63 X 63)	1335 X 1335(53 X 53)	675(27)	770(30)	480
★★	SG 250/300	250	300	1499 X 1473(59 X 58)	1219 X 1194(48 X 47)	965(38)	1041(41)	620
★★	SG 300/400	300	400	1524 X 1575(60 X 62)	1143 X 1143(45 X 45)	1194(47)	1270(50)	730

JC - Japan China

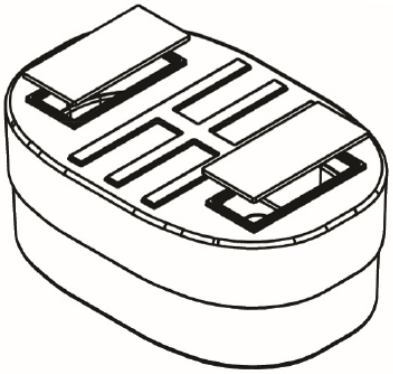

SEGI (CLOSED TOP)

D : Dimension of tank base

H : Height to top of cover

H_1 : Height to top of tank

- All dimension are rounded-off to the nearest 10mm (or 0.5 inch).
- Dimension given above are for space required for installation purpose only.
- The manufacturer reserves the right to amend or change the design, price, patterns and specifications without any prior notice as continuous improvement achieved.

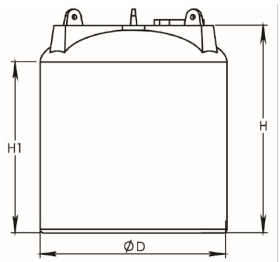

PE-CT-2000-2200

★★

P.E. TANK™ Properties - Circular Closed Top Series						
Model	Product Number	Capacity (Gallons)	Dimensions - mm(inches)			
			D_1	H	H_1	Market Price
PE 400	PE-CT-400/500	N 400/500	1400(55)	1500(59)	1321(52)	1,700
PE 600	PE-CT-600/700	N 600/700	1400(55)	2160(85)	1982(78)	2,220
PE 900	PE-CT-900/1000	N 900/1000	2300(91)	1100(43)	970(38)	3,000
PE 1000	PE-CT-1000/1200	N 1000/1200	1755(69)	2180(111)	1760(69)	3,520
PE 1300	PE-CT-1300/1500	N 1300/1500	1755(69)	2820(111)	2390(94)	4,300
PE 1500	PE-CT-1500/1800	N 1500/1800	2300(91)	2100(83)	1550(61)	5,080
PE 2000	PE-CT-2000/2200	N 2000/2200	2300(91)	2660(105)	2130(84)	6,120
PE 3000	PE-CT-3000/3400 ⬟⬟	N 3000/3400	3000(118)	2200(87)	1950(77)	9,240
PE 3000	PE-CT-3000/3500 ⬟⬟	N 3000/3500	2300(91)	3620(143)	3160(125)	9,500
PE 4000	PE-CT-4000/4400 ⬟⬟	N 4000/4400	3000(118)	2850(112)	2720(107)	11,840

⬟⬟ Note: For 3000 Gsllond & sbove include level indicator, internal & external ladder.

Joncan
Commercial Furniture Specialist

INSTALLATION INSTRUCTION

Setting Circular Hole on Tank

- Used hole saw, sharp hollow punch or sharp driller to make circular hole.
- Avoid scoring or scratching tank for drill the circular hole.
- Use only plastic, rubber washers and PTFE tapes when connecting and joining pipes and other fitting to the tank.
- Do not use putty or any form of jointing compound.

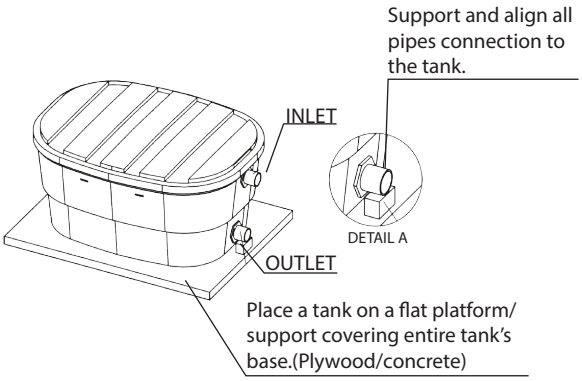

WARNING:DO NOT OVERTIGNTENED THE BACKNUT AGAINST THE TANK!

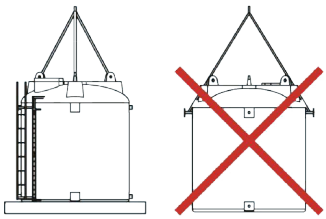

Unload and lift tank using crane and tank's lifting lugs provided.(below diagram)
Do not lift with side fitting.

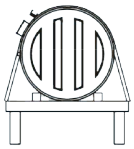

Do After lift / loading using crane on the lorry / low loader ,tank must be safeguarded by wrapping slings around the body of tanks.
Strictly NOT on pipes fitting.

P.E. Tanks surrounding area should have FENCING to prohibit unauthorised person's to prevent incidents eg.Strike on tanks with hammer, spanner or sharp object.

WARNING:

- **CONNECTING PIPE WORK NOT SUPPORTED WITH STEEL OR CONCRETE FOOTING MAY CAUSE LEAKAGE.**
- **ELEVATED PLATFORM SHALL BE FREE OF DEBRIS OR STONE AND EVEN SURFACE.**

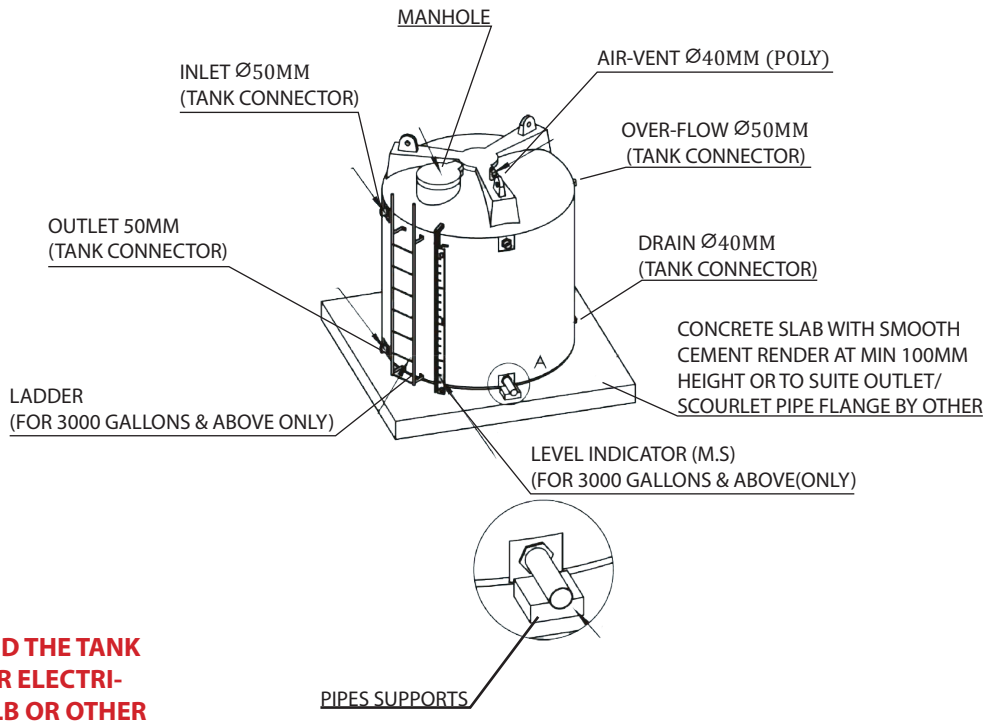

CAUTION:

- **DO NOT PLACED THE TANK NEAR A HEATER ELECTRICAL LIGHT BULB OR OTHER SOURE OF HEAT.**
- **DO NOT LIFT THE TANK WHEN FILLED WITH LIQUID/WATER.**

WARRANTY TERMS & CONDITIONS FOR CLOSED TOP & OPEN TOP SERIES

(i) 8 years (outdoor) and/ or 10 years (indoor) warranty covers P.E. Tank **MS 1225:PART 1:2007 & MS 1225:PART 2 :2006** tanks only.
(ii) We shall not be held responsible for any defects or damages to the tank if the installation instructions are not adhered to.
(iii) Our liability is strictly limited to replacing the water tanks. The company will not be responsible for any consequential loss resulting from the tanks.
(iv) Our P.E. Tanks are used for cold water storing on elevated even surface.

Authorised Distributor:

Joncan
Commercial Furniture Specialist

MARKETING
OFFICE

69-01,JALAN IMPIAN EMAS 22,
TAMAN IMPIAN EMAS,
81300 SKUDAI,JOHOR,
MALAYSIA.

www.joncan-furniture.com

Tel:07-554 7816
Fax:07-557 5994

Email:joncanfrp@yahoo.com

Joncan
Commercial Furniture Specialist